Work Order ID 69543

Wednesday, May 11, 2011 3:15:26 PM

Item ID: D3651-5 **Accept** **Setup Start**

Revision ID: **Stop**

Item Name: Top Flange

Start Date: 5/11/2011 **Start Qty:** 4.00 **Cust Item ID:**

Required Date: 5/16/2011 **Req'd Qty:** 4.00 **Customer:**

Reference:

Approvals: **Process Plan:** H **Date:** 1-05-11 **Tooling:** _____ **Date:** _____ **Run Start**

QC: _____ **Date:** _____ **SPC (Y/N):** _____ **Date:** _____ **Stop**

Sequence ID/ Work Center ID	Operation Description	Set Up/ Run Hours	Tool ID	Tool #	Plan Code	Accept Qty	Reject Qty	Reject Number	Insp. Stamp
Draw Nbr	**Revision Nbr**								
D3651	Rev B								
100		0.00							
Waterjet	FLOW WATER JET					HB 11-5-19			
FLOW CNC Waterjet	**Memo**	0.00							
304 .018	1-Cut as per Dwg D3651 Dwg Rev: B Prog Rev: B 2-Deburr if necessary	SB 11/05/19				(5)			
110	QC2- Inspect parts off machine FAI/FAIB	0.00							
QC						HB 11-5-19			
Quality Control	**Memo**	0.00							
120	QC8- Inspect parts - second check	0.00							
QC						(✓5)			
Quality Control	**Memo**	0.00 δ 11/05/19							

Dart Aerospace Ltd

W/O:		WORK ORDER CHANGES					
DATE	STEP	PROCEDURE CHANGE	By	Date	Qty	Approval Chief Eng / Prod Mgr	Approval QC Inspector

Part No: _____ **PAR #:** _____ **Fault Category:** _____ **NCR:** Yes No **DQA:** _____ **Date:** _____

Resolution: _____ **Disposition:** _____ **QA: N/C Closed:** _____ **Date:** _____

NCR:		WORK ORDER NON-CONFORMANCE (NCR)						
DATE	STEP	Description of NC Section A	Corrective Action Section B			Verification Section C	Approval Chief Eng	Approval QC Inspector
			Initial Chief Eng	Action Description Chief Eng	Sign & Date			

NOTE: Date & initial all entries

H:\fFORMS\Quality Assurance\approved QA\NCRWO RevE

Work Order ID 69543

Wednesday, May 11, 2011 3:15:26 PM

Item ID: D3651-5 **Accept** **Setup Start**

Revision ID: **Stop**

Item Name: Top Flange

Start Date: 5/11/2011 **Start Qty:** 4.00 **Cust Item ID:**

Required Date: 5/16/2011 **Req'd Qty:** 4.00 **Customer:**

Reference:

Run Start

Approvals: **Process Plan:** _____ **Date:** _____ **Tooling:** _____ **Date:** _____

Stop

QC: _____ **Date:** _____ **SPC (Y/N):** _____ **Date:** _____

Sequence ID/ Work Center ID	Operation Description	Set Up/ Run Hours	Tool ID	Tool #	Plan Code	Accept Qty	Reject Qty	Reject Number	Insp. Stamp
160	Form as per dwg	0.00							
Brake NC	NC BRAKE					5			
Brake NC	Memo	0.00							
		SB 11/05/24							
170	QC5- Inspect part completeness to step on W/O	0.00							
QC		SB 11/05/30				XS			
Quality Control	Memo	0.00							
180	Identify as per dwg & Stock Location: GA	0.00							
Packaging	w/o 70065	SB 11/05/30				5			
Packaging	Memo	0.00							

Dart Aerospace Ltd

W/O:		WORK ORDER CHANGES					
DATE	STEP	PROCEDURE CHANGE	By	Date	Qty	Approval Chief Eng / Prod Mgr	Approval QC Inspector

Part No: _____ **PAR #:** _____ **Fault Category:** _____ **NCR:** Yes No **DQA:** _____ **Date:** _____

Resolution: _____ **Disposition:** _____ **QA: N/C Closed:** _____ **Date:** _____

NCR:		WORK ORDER NON-CONFORMANCE (NCR)						
DATE	STEP	Description of NC Section A	Corrective Action Section B			Verification Section C	Approval Chief Eng	Approval QC Inspector
			Initial Chief Eng	Action Description Chief Eng	Sign & Date			

NOTE: Date & initial all entries

Work Order ID 69543

Wednesday, May 11, 2011 3:15:26 PM

Item ID: D3651-5 **Accept** **Setup Start**

Revision ID: **Stop**

Item Name: Top Flange

Start Date: 5/11/2011 **Start Qty:** 4.00 **Cust Item ID:**

Required Date: 5/16/2011 **Req'd Qty:** 4.00 **Customer:**

Reference:

Run Start

Approvals: **Process Plan:** _____ **Date:** _____ **Tooling:** _____ **Date:** _____

Stop

QC: _____ **Date:** _____ **SPC (Y/N):** _____ **Date:** _____

Sequence ID/ Work Center ID	Operation Description	Set Up/ Run Hours	Tool ID	Tool #	Plan Code	Accept Qty	Reject Qty	Reject Number	Insp. Stamp
190	QC21- Final Inspection - Work Order Release	0.00					11/5/30		
QC Quality Control	**Memo**	0.00							

11-05-30

5

Dart Aerospace Ltd

W/O:		WORK ORDER CHANGES					
DATE	STEP	PROCEDURE CHANGE	By	Date	Qty	Approval Chief Eng / Prod Mgr	Approval QC Inspector

Part No: _____ **PAR #:** _____ **Fault Category:** _____ **NCR:** Yes No **DQA:** _____ **Date:** _____

Resolution: _____ **Disposition:** _____ **QA: N/C Closed:** _____ **Date:** _____

NCR:		WORK ORDER NON-CONFORMANCE (NCR)						
DATE	STEP	Description of NC Section A	Corrective Action Section B			Verification Section C	Approval Chief Eng	Approval QC Inspector
			Initial Chief Eng	Action Description Chief Eng	Sign & Date			

NOTE: Date & initial all entries

Picklist Print

Wednesday, May 11, 2011 3:15:32 PM

Work Order ID: 69543

Parent Item: D3651-5

Parent Item Name: Top Flange

Start Date: 5/11/2011 **Required Date:** 5/16/2011

Start Qty: 4.00 **Required Qty:** 4.00

Comments: IPP RevA 10.11.04 as per revB DD verf:EC

Component Item ID/ Item Name	Replacement Item ID	Mfg/ Purch	Bin Item	Primary Location	Last Location	Route Seq ID	Unit of Measure	Qty on Hand	Qty per Kit	Total Qty	Qty Issued	Date Issued	Status
M304S26GA 304/316 0.018 SHEET		Purchased	No			100	sf	15.0000	0.3	1.263158 1B11-5-19			

Location	Loc Qty	Loc Code
MAT020	15	
109398	3	
112885	12	

109398

Dart Aerospace Ltd

W/O:		WORK ORDER CHANGES					
DATE	STEP	PROCEDURE CHANGE	By	Date	Qty	Approval Chief Eng / Prod Mgr	Approval QC Inspector

Part No: _____ **PAR #:** _____ **Fault Category:** _____ **NCR:** Yes No **DQA:** _____ **Date:** _____

Resolution: _____ **Disposition:** _____ **QA: N/C Closed:** _____ **Date:** _____

NCR:		WORK ORDER NON-CONFORMANCE (NCR)						
DATE	STEP	Description of NC Section A	Corrective Action Section B			Verification Section C	Approval Chief Eng	Approval QC Inspector
			Initial Chief Eng	Action Description Chief Eng	Sign & Date			

NOTE: Date & initial all entries

H:\fFORMS\Quality Assurance\approved QA\NCRWO RevE

DART AEROSPACE LTD	Work Order:	69543
Description: Top Flange	Part Number:	D3651-5
Inspection Dwg: D3651 **Rev:** B		Page 1 of 1

FIRST ARTICLE INSPECTION CHECKLIST

[X] First Article [ ] Prototype

Drawing Dimension	Tolerance	Actual Dimension	Accept	Reject	Method of Inspection	Comments
Ø0.098	+0.004/-0.001	.098	✓		✓ IB02	
Ø0.129	+0.005/-0.001	.129	✓		✓	
0.26	+/-0.030	.260	✓		✓	
0.26	+/-0.030	.267	✓		✓	
2.21	+/-0.030	2.206	✓		✓	
1.66	+/-0.030	1.663	✓		✓	
3.16	+/-0.030	3.159	✓		✓	
0.36	+/-0.030	.360	✓		✓	
0.33	+/-0.030	.330	✓		✓	
0.500	+/-0.010	.499	✓		✓	
0.33	+/-0.030	.332	✓		✓	
0.500	+/-0.010	.503	✓		✓	
0.450	+/-0.010	.450	✓		✓	
0.19	+/-0.030	.180	✓		✓	
0.98	+/-0.030	.985	✓		✓	
0.48	+/-0.030	.479	✓		✓	
0.25	+/-0.030	.255	✓		✓	

Measured by:	IB	Audited by:	S	Prototype Approval:	N/A
Date:	11-5-19	Date:	11/05/19	Date:	N/A

Rev	Date	Change		Revised by	Approved
A	08.10.07	New Issue	P/O D3651-043	KJ/DD	

Dart Aerospace Ltd

W/O:		WORK ORDER CHANGES					
DATE	STEP	PROCEDURE CHANGE	By	Date	Qty	Approval Chief Eng / Prod Mgr	Approval QC Inspector

Part No: _____ **PAR #:** _____ **Fault Category:** _____ **NCR:** Yes No **DQA:** _____ **Date:** _____

Resolution: _____ **Disposition:** _____ **QA: N/C Closed:** _____ **Date:** _____

NCR:		WORK ORDER NON-CONFORMANCE (NCR)						
DATE	STEP	Description of NC Section A	Corrective Action Section B			Verification Section C	Approval Chief Eng	Approval QC Inspector
			Initial Chief Eng	Action Description Chief Eng	Sign & Date			

NOTE: Date & initial all entries

H:\fFORMS\Quality Assurance\approved QA\NCRWO RevE

SHOP COPY
RETURN TO
ENGINEERING
UNCONTROLLED COPY
SUBJECT TO AMENDMENT
WITHOUT NOTICE
WORK ORDER
NO. 69543 RM11-05-11

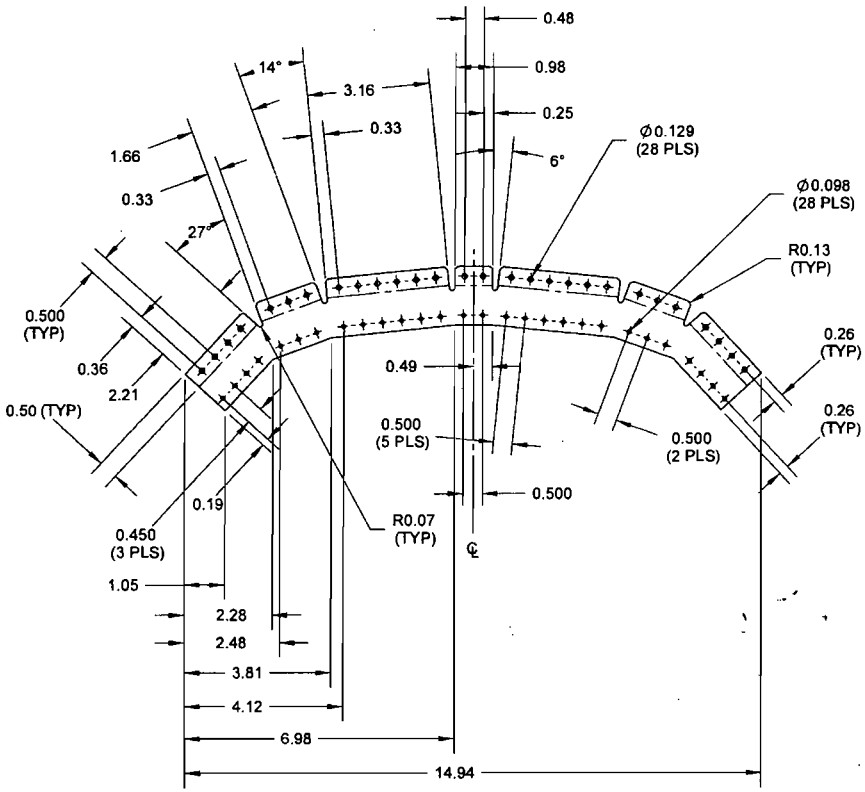

D3651-5F FLAT PATTERN (B)

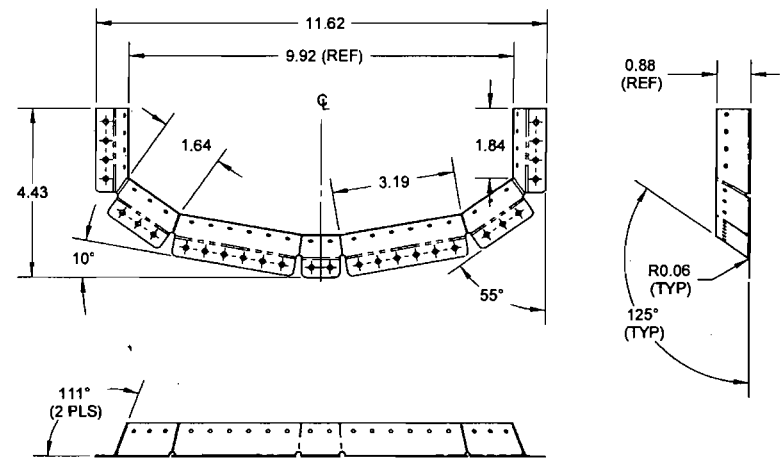

D3651-5 TOP FLANGE BEND DETAIL (B)
(MAKE FROM D3651-5F FLAT PATTERN)

RELEASED 08-03-27 MP

NOTES:
1) MATERIAL: AISI 304/316 STAINLESS STEEL 0.018 (26 GAUGE) SHEET, PER MIL-S-5019 (REF. DART SPEC. M304S26GA)
2) FINISH: NONE
3) TOLERANCES: PER DART QSI 018 UNLESS OTHERWISE NOTED
4) UNITS: INCHES UNLESS OTHERWISE NOTED
5) BREAK SHARP EDGES: 0.005 TO 0.010 MAX
6) IDENTIFICATION: NONE
7) WEIGHT: 0.02 lbs

DESIGN	RF	**DART AEROSPACE LTD** HAWKESBURY, ONTARIO, CANADA
DRAWN	RF	
CHECKED		DRAWING NO. D3651 — REV. B — SHEET 5 OF 9
MFG. APPR.		
APPROVED		TITLE: AFT BASE ASSEMBLY — SCALE 1:3
DE APPR.		
DATE	08.01.07	

Dart Aerospace Ltd

W/O:		WORK ORDER CHANGES					
DATE	STEP	PROCEDURE CHANGE	By	Date	Qty	Approval Chief Eng / Prod Mgr	Approval QC Inspector

Part No: _____ **PAR #:** _____ **Fault Category:** _____ **NCR:** Yes No **DQA:** _____ **Date:** _____

Resolution: _____ **Disposition:** _____ **QA: N/C Closed:** _____ **Date:** _____

NCR:		WORK ORDER NON-CONFORMANCE (NCR)						
DATE	STEP	Description of NC Section A	Corrective Action Section B			Verification Section C	Approval Chief Eng	Approval QC Inspector
			Initial Chief Eng	Action Description Chief Eng	Sign & Date			

NOTE: Date & initial all entries

H:\fFORMS\Quality Assurance\approved QA\NCRWO RevE